PA-6622

NEW

RoHS Compliant

The One-of-a-kind Highly Integrated 10.4" POS Terminal

Features

- Intel® Celeron® J1900 CPU
- 10.4" LCD display with touch
- Flexible design for versatile applications
- Optional 2"/3" easy loading thermal printer
- Optional MSR. i-Button & Fingerprint & RFID
- Small footprint and Streamline design

intel Celeron inside | POSReady | WEPOS Ready | USB 2.0 | DDR3 | SATA HDD

Specifications

System	CPU Support	Intel® Celeron® J1900 CPU
	Memory	DDR3L SO-DIMM (1 slot, up to 8GB)
	Network	10/100/1000 Base-T Fast Ethernet
	Power Supply	120Watt Power Adapter
	Audio	2W Speaker
	System Weight	with power adaptor approx. 6kg
	Dimension	315 x 320 x 160 mm
	O.S. Support	WIN8 / POSReady7
Storage	SATA	1 x 2.5" HDD or SSD
	mSATA	1 x SSD
I/O Ports	USB	4 x USB on rear, 1 x USB on side bezel
	Serial Port	3 + 1(option) x DB9 (+5V/ 12V selectable)
	LAN	1 x RJ45
	VGA	1 x DB15
	Line Out	1 x phone jack
	Cash Drawer	1 x RJ11 (+12V or +24V selectable)
	DC-in	1 x 4pin DC Power Jack
	LPT	1 x DB25(option)
Peripheral	Customer Display	VFD kit, 20 columns and 2 lines, each column is 5 x 7 dots
	Printer	2" or 3" easy loading thermal printer with Auto cutter
	MSR & iButton	ISO I,II,III; JIS I,II and support information key
	RFID	ISO14443A Read /Write; ISO18092 Read only
	Fingerprint	8-bit grayscale, reader
Display	LCD	10.4" TFT LCD
	Max. Resolution	1024x768 /800x600
	Brightness	400 /230 cd/m²
	Touch Screen	5-wire Analog resistive
	Tilt Angle	24 ~ 30 degrees
Environment	EMC & Safety	CE / FCC
	Operating Temp.	0 ~ 35° C
	Storage Temp.	-5 ~ 60° C
	Humidity	20 ~ 90%

*All information contained in this document is subject to change without prior notice. Please log on www.protech.com.tw to acquire latest information

Highlights

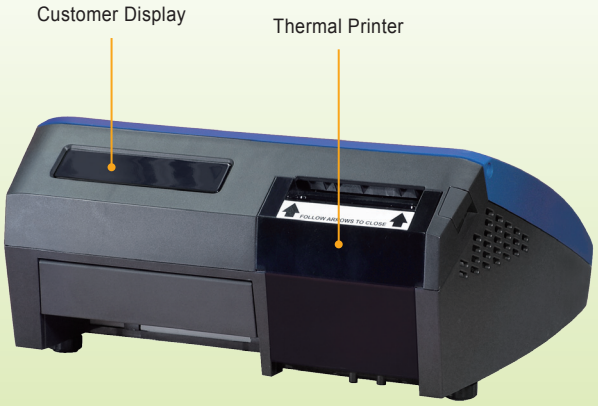

System I/O Ports

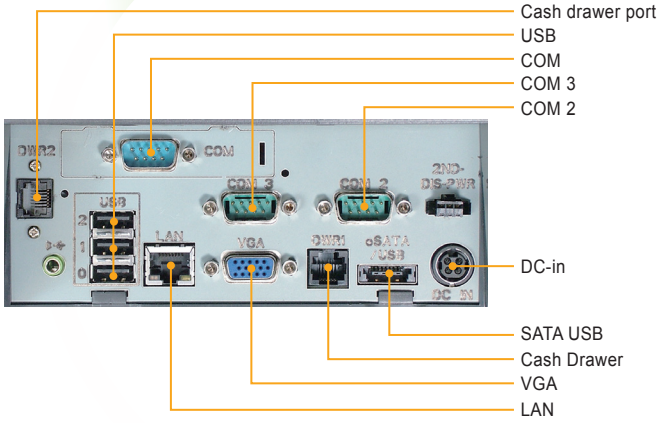

Ordering Information

Order No	Description
PA-6622RA	PA-6622 barebone, Intel® 10.4" Celeron® J1900 POS /black /1024x768 LCD, Resistance TouchScreen
PA-3251RZ-2JA	DDR3 2GB memory/ 2.5" HDD
PA-6622RZ-35B	Embedded RFID, ISO 14443A, Felica-Lite
PA-3200RZ-45A	Embedded MSR, PS2 interface
PA-6822RZ-31B	Embedded VFD module, RS232 interface
52-002-02012001	120 Watt Power Adaptor
PA-6822RZ-47A	Embedded 3" Thermal Printer
PA-6055RZ-61A	Embedded Wireless module (802.11b/g/n)

Applications

- Hospitality
- Retail
- Replacement of ECR

Dimensions

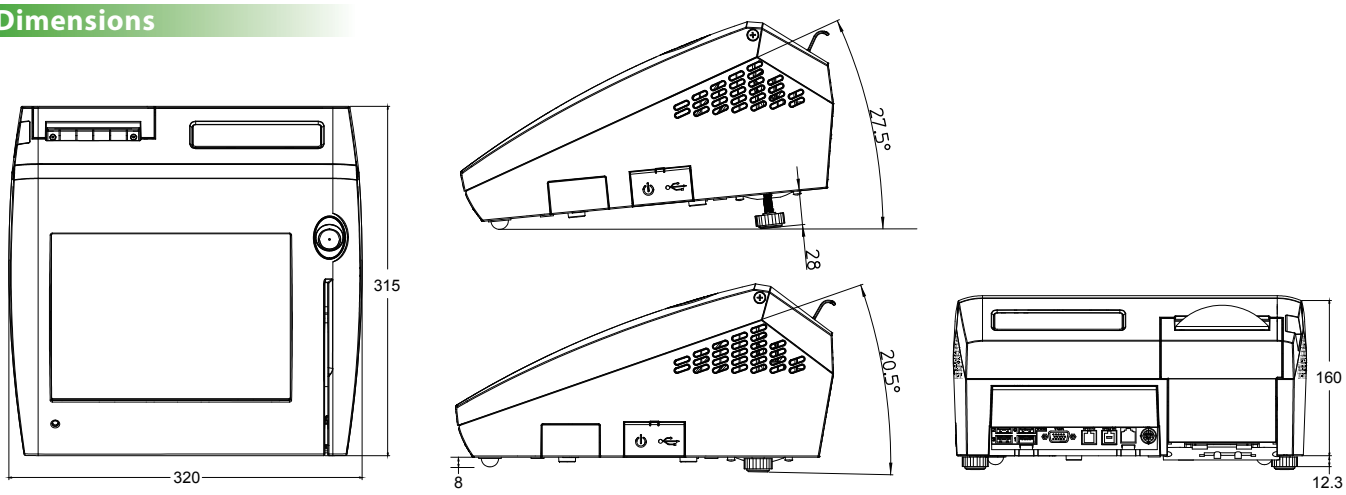

Protech Systems Co., Ltd.
No. 24, Lane 365, Yang Goang Street,
Nei Hu District Taipei 114, Taiwan R.O.C.
TEL: +886-2-8751-1111

Protech Technologies Inc.
950 Fee Ana St, Suite B
Placentia, CA 92870
TEL: +1-714- 996-7200

Protech Japan Co., Ltd.
OSK Bldg, 6F, 6-25-14, Minami-ohi
Shinagawa-ku, Tokyo, 140-0013
TEL: +81-3-5753-8411

PROX SYSTEMS Germany GmbH
Weststrasse 20a, 40721 Hilden
düsseldorf, Germany
TEL: +49 (0) 2103-41898-18